1885680
O-Madrid Cabinet
Parts and Hardware List

A.	Top	1 pc
B.	Right Side Panel	1 pc
C.	Left Side Panel	1 pc
D.	Bottom	1 pc
E.	Right Door	1 pc
F.	Left Door	1 pc
G.	Door Pulls	2 pcs
H.	Shelves	3 pcs
I.	Shelf Supports	12 pcs
J.	Back Panel	1 pc
K.	Connecting Bolts	8 pcs
L.	Eccentric Cams	8 pcs
M.	Plastic Caps	8 pcs
N.	Pan Head Screws	22 pcs
O.	Flat Head Screws	12 pcs
P.	Short Bolts	2 pcs
Q.	Phillips Head Screwdriver	1 pc

∗ Please make sure that you have all the parts and hardware indicated above before you begin assembly of this item.
∗ Use the hardware illustrations to determine correct piece and size.
∗ This item should be assembled on a soft surface to prevent scratching the finish during assembly.
∗ This item may require periodic tightening.

1885680
O-Madrid Cabinet

Hardware Illustrations

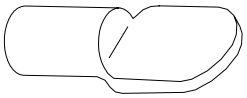

I. Shelf Support

K. Connecting Bolt

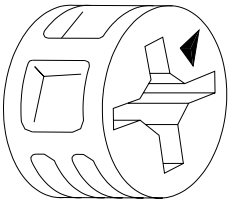

L. Eccentric Cam

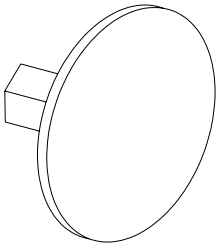

M. Plastic Cap

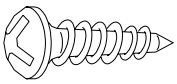

N. Pan Head Screw

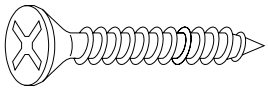

O. Flat Head Screw

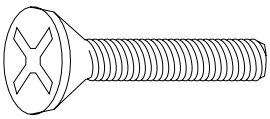

P. Short Bolt

1885680
O-Madrid Cabinet

Attach Top, Bottom, & Sides

Parts required

A.	Top	1 pc	K.	Connecting Bolts	8 pcs
B.	Right Side Panel	1 pc	L.	Eccentric Cams	8 pcs
C.	Left Side Panel	1 pc	M.	Plastic Caps	8 pcs
D.	Bottom	1 pc	Q.	Phillips Head Screwdriver	1 pc

1. **Attach Connecting Bolts (K)** Align the exposed threads of the Connecting Bolts (K) with the pre-threaded holes in the Top (A) and Bottom (D). Tighten in a clockwise direction using the Phillips Head Screwdriver (Q). See Illustration #1.
2. **Attach Bottom (D) to Side Panels (B,C)** Align the Connecting Bolts (K) in the Bottom (D) with pre-drilled holes in ends of the Right & Left Side Panels (B,C). Be sure the dowels in the Right & Left Side Panels (B,C) align with the pre-drilled holes in the Bottom (D). Insert the Eccentric Cams (L) into the pre-drilled holes in the Right & Left Side Panels (B,C). Make sure the "X" pattern faces out and arrows point to holes for connecting bolts. Use the Phillips Head Screwdriver (Q) to adjust the Eccentric Cams (L) and lock the Connecting Bolts (K) in place by turning in a clockwise direction. Cover all the Eccentric Cams (L) with the Plastic Caps (M). See Illustration #1.
3. **Attach Top (A) to Side Panels (B,C)** Repeat Step #2 to attach Top (A). See Illustration #1.

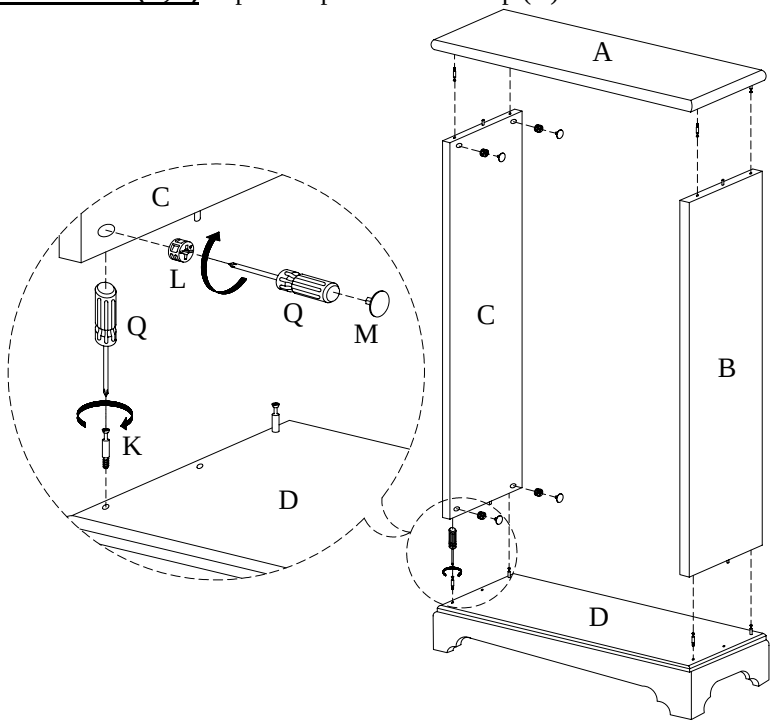

Illustration #1

1885680
O-Madrid Cabinet

Attach Back Panel

Parts required

A.	Top	1 pc	J.	Back Panel	1 pc
B.	Right Side Panel	1 pc	N.	Pan Head Screws	22 pcs
C.	Left Side Panel	1 pc	Q.	Phillips Head Screwdriver	1 pc
D.	Bottom	1 pc			

4. **Attach Back Panel (J)** Place the Back Panel (J) into the grooves of the Right & Left Side Panels (B,C), Top (A) and Bottom (D). Secure in place with the Pan Head Screws (N) using the Phillips Head Screwdriver (Q). See Illustration #2.

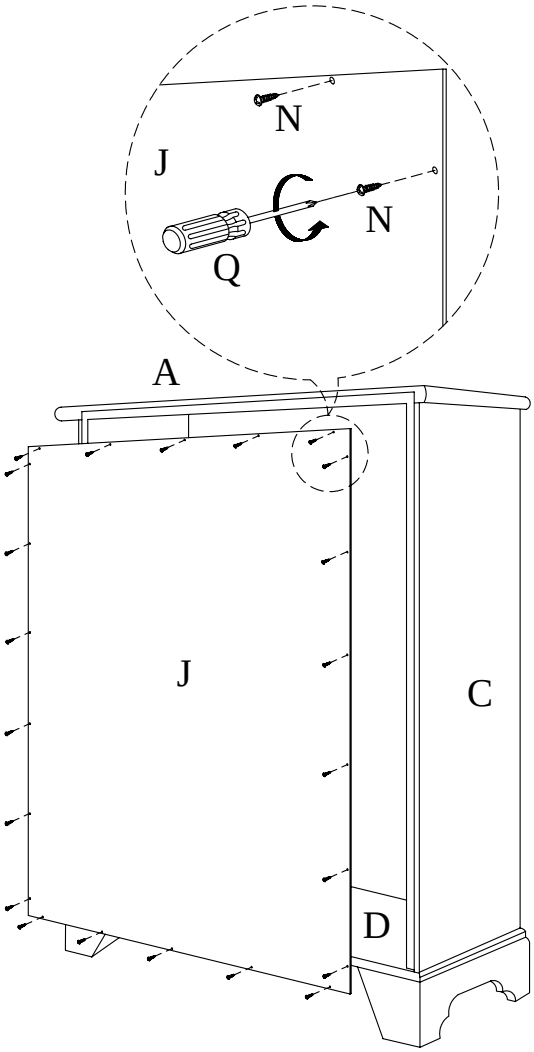

Illustration #2

1885680
O-Madrid Cabinet

Attach Doors and Shelves

Parts required

B.	Right Side Panel	1 pc	H.	Shelves	3 pcs
C.	Left Side Panel	1 pc	I.	Shelf Supports	12 pcs
E.	Right Door	1 pc	O.	Flat Head Screws	12 pcs
F.	Left Door	1 pc	P.	Short Bolts	2 pcs
G.	Door Pulls	2 pcs	Q.	Phillips Head Screwdriver	1 pc

5. **Attach Doors (E,F)** Align holes in the hinges of the Right & Left Side Panels (B,C) with pre-drilled holes in the Right & Left Doors (E,F). Secure in place with the Flat Head Screws (O) using the Phillips Head Screwdriver (Q). See Illustration #3.
6. **Attach Door Pulls (G)** Align the pre-drilled holes in the Doors (E,F) with pre-threaded holes in the Door Pulls (G). Secure in place with Short Bolts (P) using Phillips Head Screwdriver (Q). See Illustration #3.
7. **Install Shelves (H)** Insert the Shelf Supports (I) into the pre-drilled holes in the Right & Left Side Panels (B,C) at the desired locations. Place the Shelves (H) onto the Shelf Supports (I). See Illustration #3.

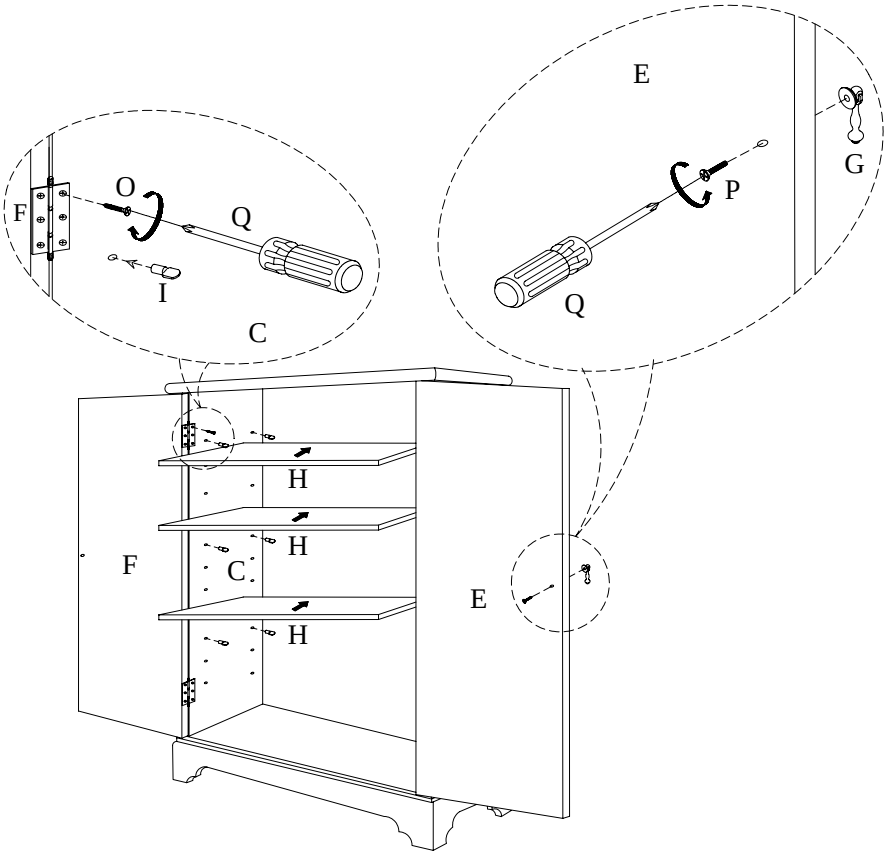

Illustration #3